VALVE END VIEW

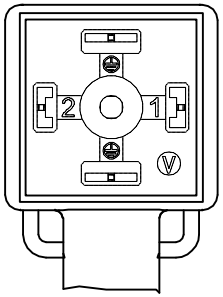

1 = BLACK #1
2 = BLACK #2
GND = GREEN/YELLOW

WIRING DIAGRAM

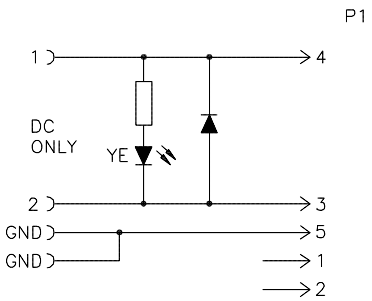

MALE END VIEW

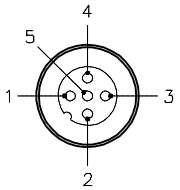

1 = N/C
2 = N/C
3 = BLACK #2
4 = BLACK #1
5 = GREEN/YELLOW

SPECIFICATIONS

CONTACT CARRIER MATERIAL	NYLON or TPU
CONTACT MATERIAL/PLATING	BRASS/SILVER (J1), BRASS/GOLD (P1)
MOLDED HEAD MATERIAL/COLOR	TPU/TRANSLUCENT BLK (J1), YEL (P1)
COUPLING NUT MATERIAL/PLATING (P1)	BRASS/NICKEL
RATED CURRENT	4.0 A
RATED VOLTAGE	24–48 V
OUTER JACKET MATERIAL/COLOR	PVC/GRAY
CONDUCTOR INSULATION	PVC
NUMBER OF CONDUCTORS	3x18 AWG
TEMPERATURE RATING	–40°C to +105°C (–40°F to +221°F)
PROTECTION CLASS	MEETS NEMA 1,3,4,6P AND IEC IP67

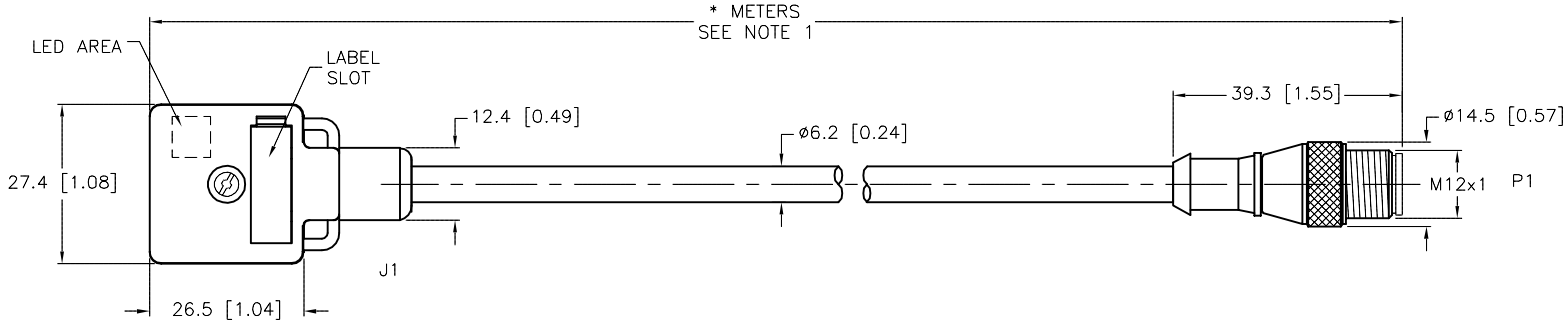

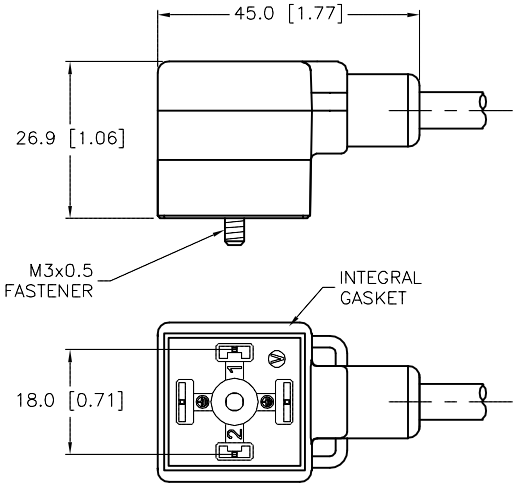

CABLE LENGTH	TOLERANCE *
ALL LENGTHS	+ 4% (OR 50mm) OF LENGTH – 0% (OR 0mm) OF LENGTH WHICHEVER IS GREATER
STRIP LENGTH	**TOLERANCE ***
0–7mm	±0.5mm
8–29mm	±1.0mm
30–49mm	±2.0mm
50–69mm	±3.0mm
70–100mm	±4.0mm
OVER 100mm	±5.0mm
* UNLESS OTHERWISE SPECIFIED	

SOURCE DRAWING - FOR REFERENCE ONLY

NOTES:

1."*" INDICATES CABLE LENGTH IN METERS. CONTACT TURCK TO ORDER SPECIFIC LENGTHS.

REV	DESCRIPTION	BY	DATE	ECO NO.
B	UPDATE VALVE MOLD BODY PER ECO	KMY	02/27/13	41422

RELATED DOCUMENTS
1.
2.
3.
4.

3RD ANGLE PROJECTION

THIS DRAWING IS CONFIDENTIAL AND THE PROPERTY OF TURCK INC. USE OF THIS DOCUMENT WITHOUT WRITTEN PERMISSION IS PROHIBITED.

TURCK

3000 CAMPUS DRIVE
MINNEAPOLIS, MN 55441
1-800-544-7769
(763) 553-7300
(763) 553-0708 fax
www.turck.us

MATERIAL: SEE SPECIFICATIONS

FINISH: SEE SPECIFICATIONS

ALL DIMENSIONS DISPLAYED ON THIS DRAWING ARE FOR REFERENCE ONLY

CONTACT TURCK FOR MORE INFORMATION

DRFT: RDS | DATE: 05/03/10
APVD: | SCALE: 1=1.3

UNIT OF MEASUREMENT
MILLIMETER [INCH]
DO NOT SCALE THIS DRAWING

DESCRIPTION: VAS 22-F653-*M-RS 5.3T

IDENTIFICATION NO.:

REV: B

FILE: 777015262

SHEET 1 OF 1